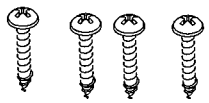

Screw in Bulk
∅4XL14

Rating	Input:12V/24 DC Output:USB Socket - 5V 2.1A max. Auto Sockets - 20A max.
Insulation Resistance	DC 500V 100MΩ Min.
Dielectric Strength	AC 1500V 1 minute
Operating Temperature	-0℃~60℃

Mounting Hole

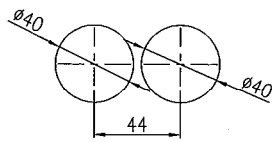

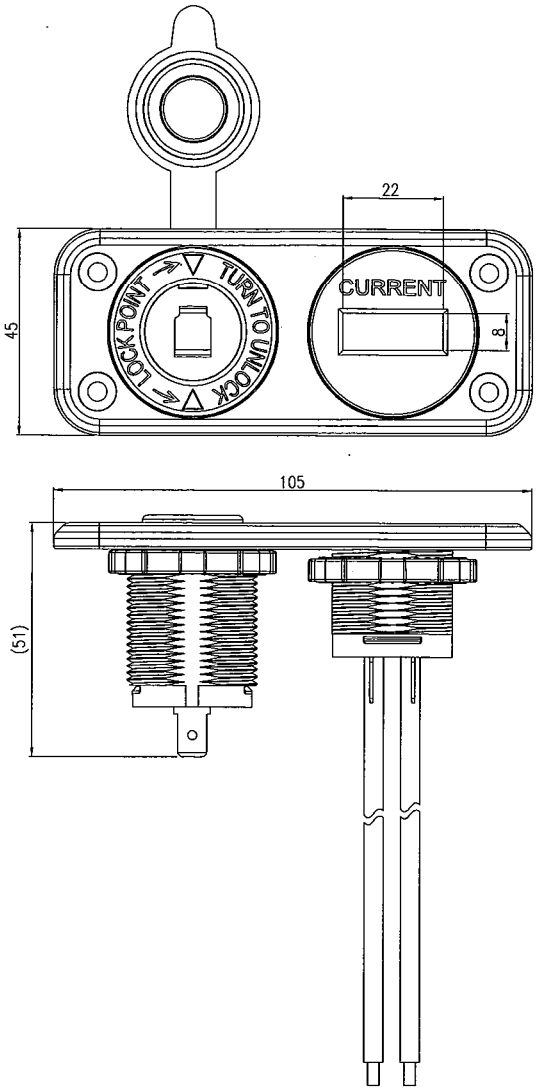

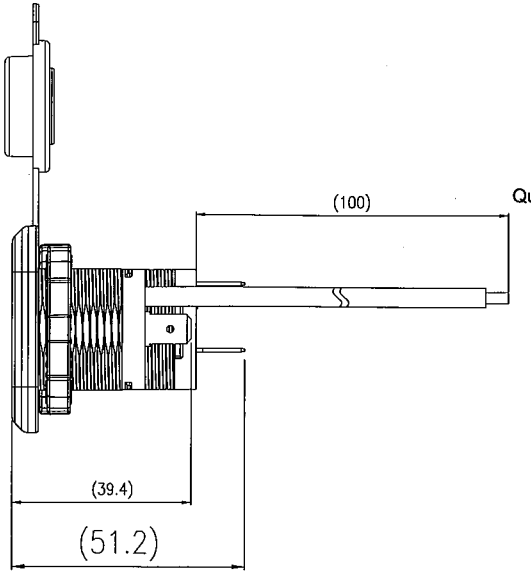

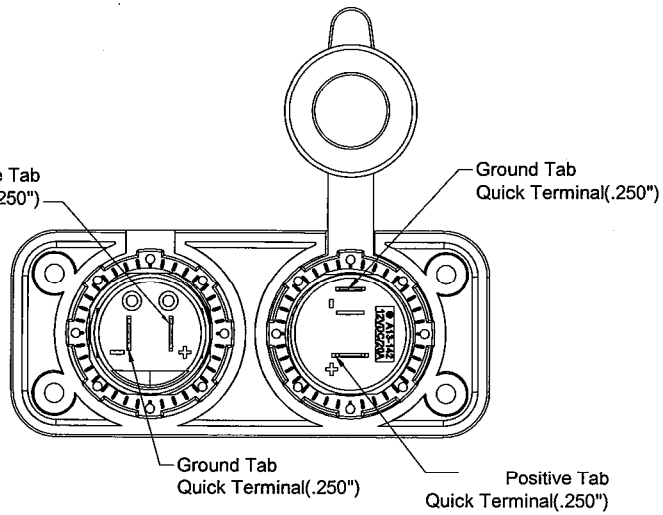

原稿
2019.1.02
研發部

1.Tolerances ±0.3 Unless Otherwise Specified

Date	Name	Description	No.
			△
			△

Drawn	Checked	Approved	SCI BOM No.	1251813	Model Name	Double socket	
方婷鳳			Customer No.		Model No.	A13-142A251BPD-BB3	Rev. X0
12/19/'18	12/19/18	12/28/18	Unit	mm	Shin Chin Industrial Co., Ltd.		