ELPROTRONIC INC.

Page 1 of 1

Title: Universal Socket boards

Type

Version 1.0

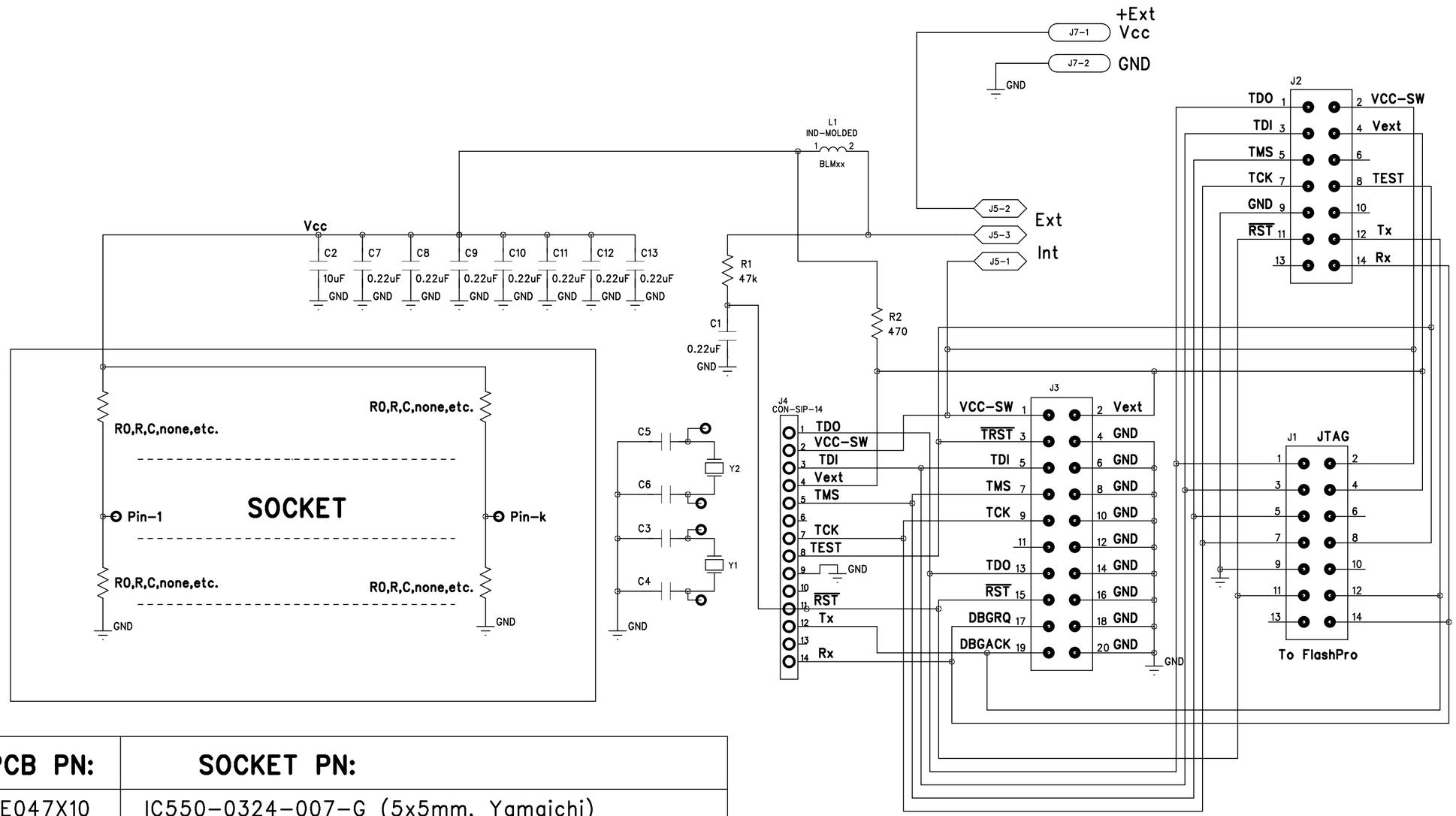

Package	PCB PN:	SOCKET PN:
QFN-32	PE047X10	IC550-0324-007-G (5x5mm, Yamaichi)
QFN-48	PE047X09	IC550-0484-004-G (7x7mm, Yamaichi)
QFN-64	PE047X08	264-5205-01 (7x7mm, 3M)
QFP-32	PE047X07	IC51-0324-1498 (7x7mm, Yamaichi)
QFP-48	PE047X06	IC234-0484-039N (8x8mm, Yamaichi)
QFP-64	PE047X05	IC51-0644-807 (10x10mm, Yamaichi)
QFP-80	PE047X04	IC201-0804-014 (12x12mm, Yamaichi)
QFP-100	PE047X03	IC201-1004-008 (14x14mm, Yamaichi)
QFP-144	PE047X02	IC201-1444-026N-2 (20x20mm, Yamaichi)

	Revision
1	
2	

Design:
G.CZAJKOWSKI
06-September-2015

Page 1 of 1