Rating	Input:7V~33V DC Voltage Tolerance: +/- 2% (0.24V @ 12V, 0.48V @ 24V) LED display. Reverse polarity protection Surge protection up to 400W/35V
Insulation Resistance	DC 500V 100MΩ Min.
Operating Temperature	-20℃~50℃

Mounting Hole

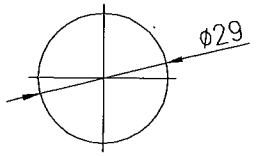

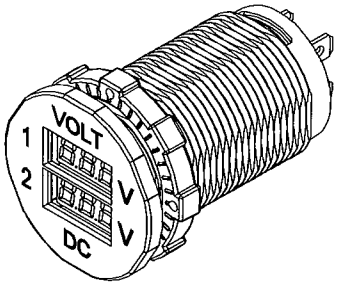

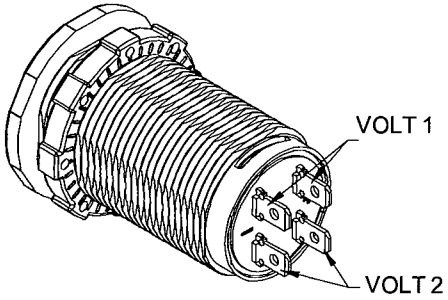

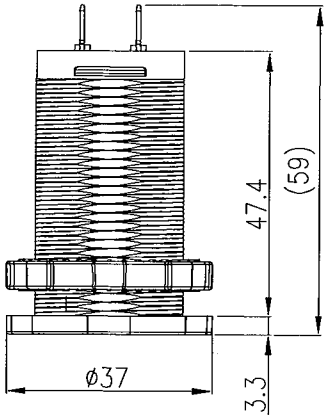

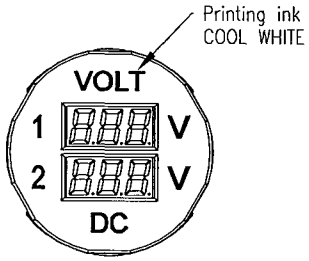

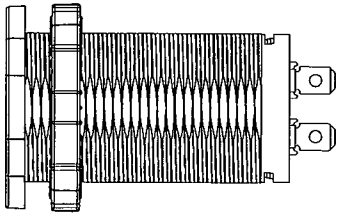

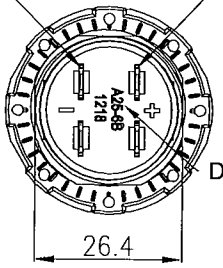

原稿
2018.7.17
研發部

Tolerances ±0.5 Unless Otherwise Specified

Date	Name	Description	No.
			△
			△

Drawn	Checked	Approved	SCI BOM No.	1570037	Model Name	DC Voltmeter	
Rock Hsu		7/2/18	Customer No.		Model No.	A25-6B-BB3-R	Rev.
6/15/"18			Unit	mm	Shin Chin Industrial Co., Ltd.		0