Rating	Operating voltage:7V~33V DC Measuring Current range:0~20.0A Current Tolerance: 5% 1A:±0.1A,10A:±0.5A,20A:±1.0A Red LED display. Reverse polarity protection.Surge protection up to 400W/35V
Insulation Resistance	DC 500V 100MΩ Min.
Operating Temperature	-20℃~50℃

Mounting Hole

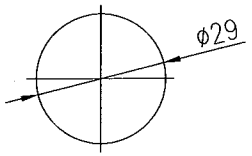

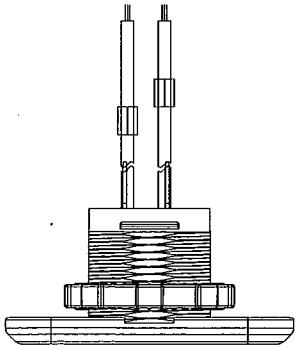

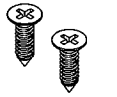

Screw in Bulk
Φ4XL14

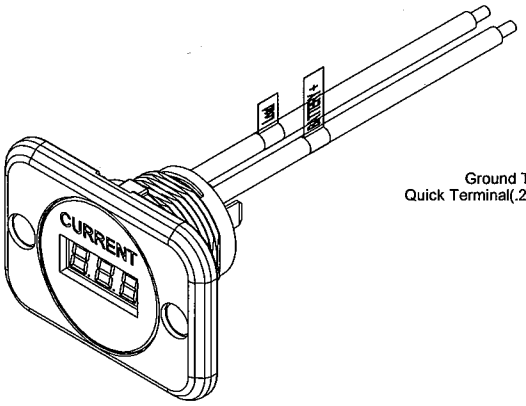

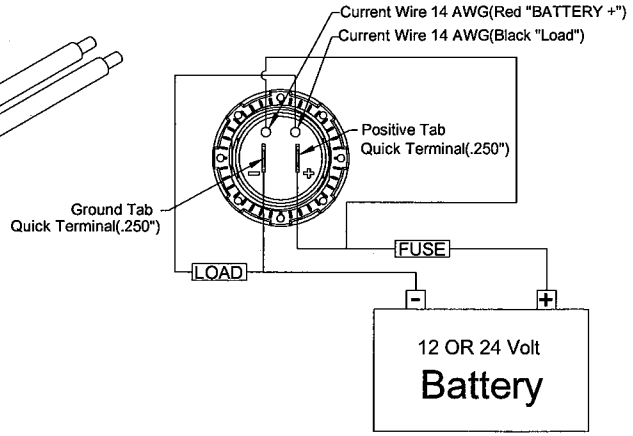

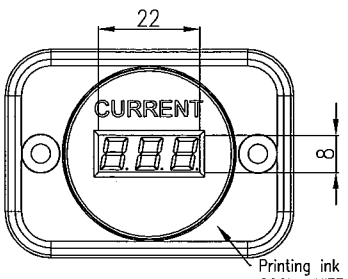

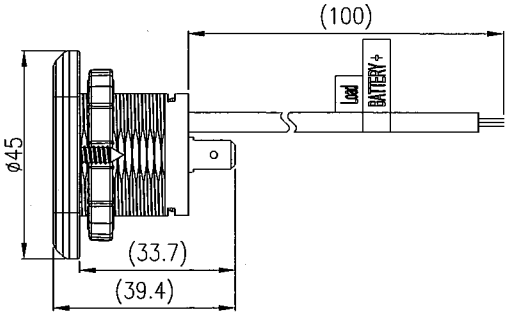

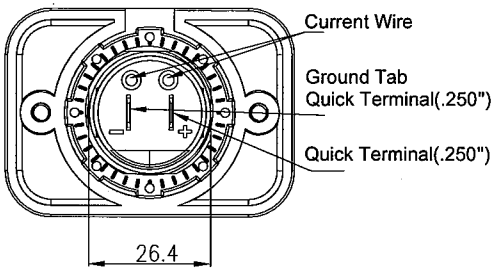

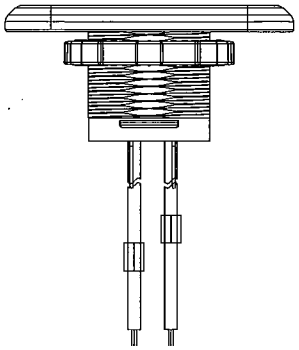

原稿
2019.3.08
研發部

Tolerances ±0.3 Unless Otherwise Specified

Date	Name	Description	No.
			△
			△

Drawn	Checked	Approved	SCI BOM No.	1570052	Model Name	DC Ammeter	
方婷鳳	許紹禎	李啟明	Customer No.		Model No.	A25-1B-PS-BB3-R	Rev.
03/04/'19	3/4/'19	3/4/'19	Unit	mm	Shin Chin Industrial Co., Ltd.		0